Air through perfection

Circular exterior grille

WPL-R

ACP
Exterior grilles

Circular exterior grille
WPL-R

Description

WPL-R circular ventilation grille is used in ventilation and air conditioning systems for the introduction or evacuation of air.

Technical specifications

Characteristics

The grille is provided with fixed blades and a metal mesh.

The wire mesh used is made of galvanized steel with a mesh size of 2x2 mm.

When installing the grille on the exterior walls it is recommended to protect the product against the weather by covering it with special exterior paint in the shade of the facade.

The grille is made with mounting holes, can be delivered without holes on request.

Dimensional range: Ø100, Ø125, Ø150, Ø160, Ø200, Ø250, Ø315, Ø400.

Materials

The grille is made of aluminum with a natural finish.

On request, the product can be painted in any shade from the RAL palette.

Technical drawing

WPL-R	ØD [mm]	ØA [mm]	B [mm]	C [mm]
D100	99	124	2.7	16.3
D125	124	150	2.7	16.3
D150	149	179	2.7	14.3
D160	159	181	3.2	14.8
D200	199	223	3.8	16.2
D250	249	275	5	15
D315	314	345	6.5	14.5
D400	399	439	6	35

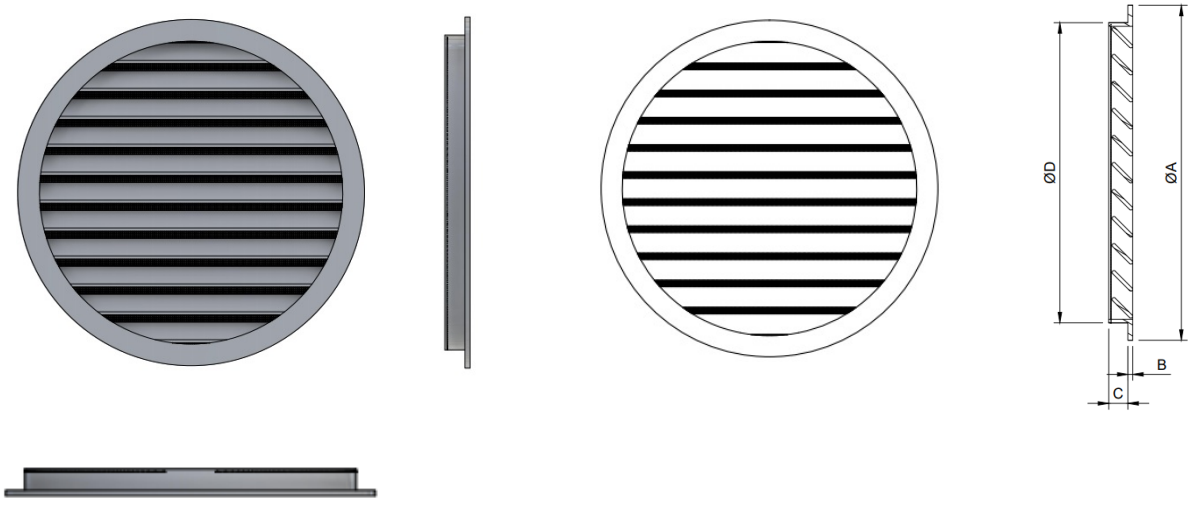

Functional parameters

Air flow [m³/h]	Diameter [mm]	100	125	150	160	200	250	315	400
	Ak [m²]	0.0044	0.0068	0.0098	0.0120	0.0200	0.0310	0.0470	0.0750
40	NR [dB(A)]	12							
	ΔPt [Pa]	10							
60	NR [dB(A)]	23	14						
	ΔPt [Pa]	22	9						
100	NR [dB(A)]	33	27	21	16				
	ΔPt [Pa]	60	25	13	10				
150	NR [dB(A)]		37	31	28	14			
	ΔPt [Pa]		55	30	23	9			
200	NR [dB(A)]		44	38	35	28	10		
	ΔPt [Pa]		105	50	40	17	6		
300	NR [dB(A)]			50	47	38	31		
	ΔPt [Pa]			120	88	35	14		
400	NR [dB(A)]				56	46	40	31	
	ΔPt [Pa]				159	65	26	11	
700	NR [dB(A)]						61	47	
	ΔPt [Pa]						75	32	
800	NR [dB(A)]							50	
	ΔPt [Pa]							39	
1000	NR [dB(A)]							58	30
	ΔPt [Pa]							70	8
1500	NR [dB(A)]								40
	ΔPt [Pa]								17
2000	NR [dB(A)]								47
	ΔPt [Pa]								32
2500	NR [dB(A)]								52
	ΔPt [Pa]								48
4000	NR [dB(A)]								63
	ΔPt [Pa]								110

The legend
Ak [m²] - The free surface
NR [dB (A)] - Noise level without room attenuation
ΔPt [Pa] - Pressure loss

Installation

The grille is mounted with screws.

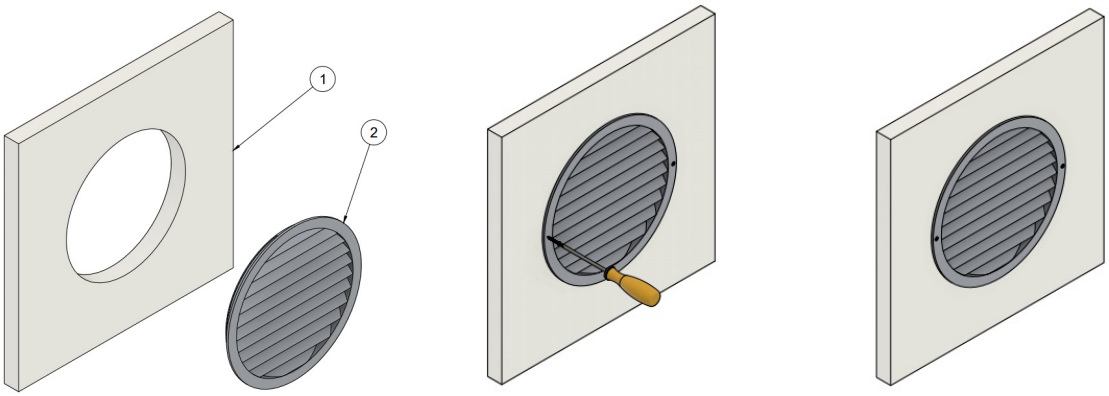

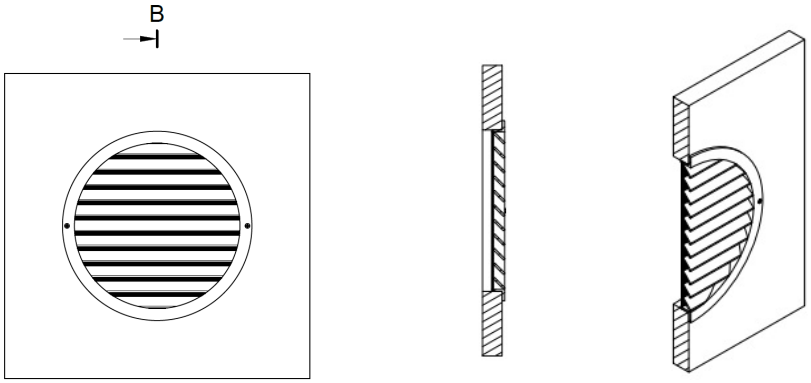

B-B

Order code

Example on how to place an order

Type	Dimensions	Finish
WPL-R		
	Ø100 ... Ø400	
		Natural aluminium (standard)
		RAL... - RAL colors on request