Air through perfection

Linear diffuser
LENOX

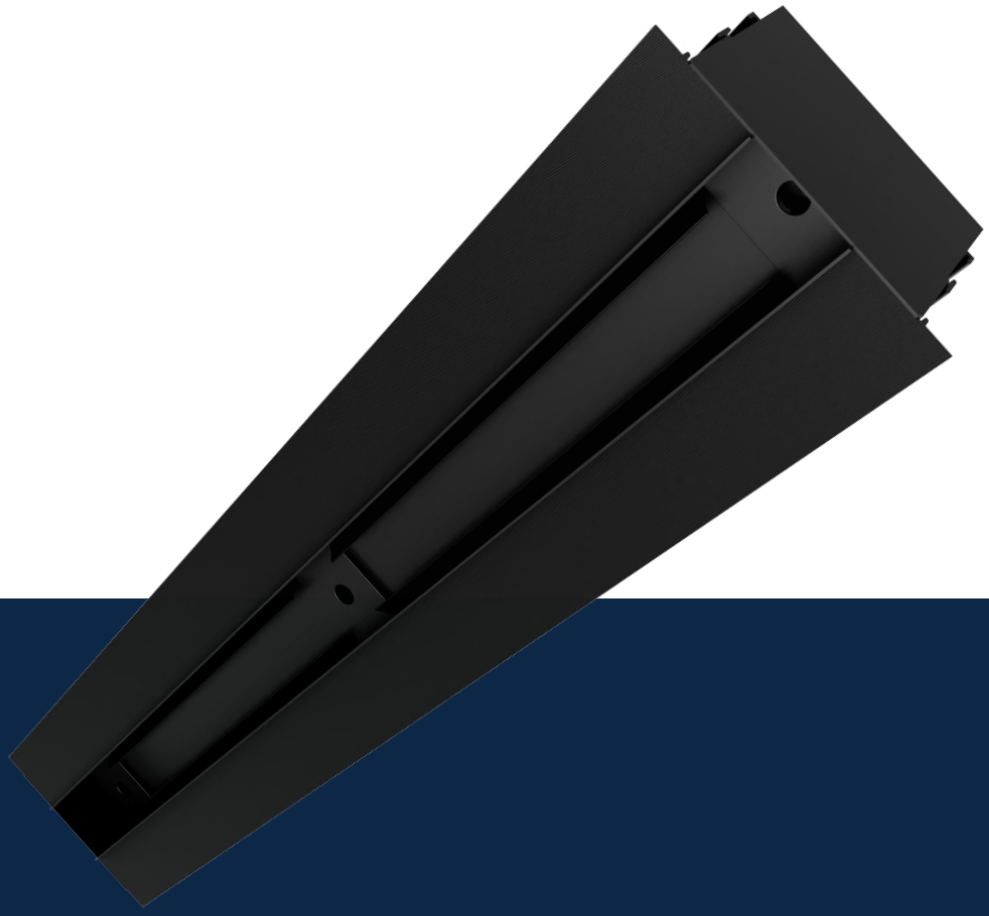

ACP
Architectural diffusers

www.acp.ro

Linear diffuser

LENOX

Description

LENOX is an architectural linear diffuser, used to introduce or evacuate air.

The diffuser is an elegant and practical ventilation solution, and the design of the product determines a high level of induction rate.

LENOX integrates fully into the ceiling and is recommended for residential spaces, conference rooms, offices, classrooms, etc.

Technical specifications

Characteristics

The diffuser is made with a linear slot, centrally positioned, with the following dimensional options: 25, 38, 51 or 64 mm.

The diffuser blades are segmented to a maximum length of 635 mm and allow multiple positioning options (up, down, center…) thus obtaining the direction of the air jet in the desired direction.

The blades are sliding and easily adjustable from the front of the diffuser.

Dimensional limits, diffuser length: minimum 0.3m and maximum 3m.

In the case of diffusers with a length > 3m, the execution is modular, and the product is delivered together with the necessary connecting parts (alignment strips).

Depending on the overall position, the modular parts are built without termination elements (caps), or with a single element - see assembly sections.

Perimeter configurations can be made by using corner sections (angle 90° and 135°).

Corner elements are inactive.

The product is delivered with the following elements: “U” type mounting system (bracket), fixing screw and masking cover for the screw.

The number of mounting systems depends on the length of the product.

Materials

The diffuser is made of black anodized aluminum.

The blades are made of galvanized steel sheet electrostatic field painted in RAL 9005.

Other RAL colours are available on request.

Technical drawing

LENOX - Linear

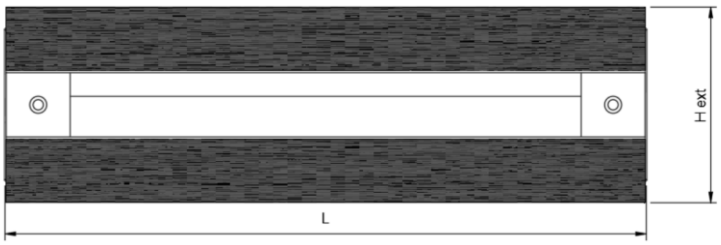

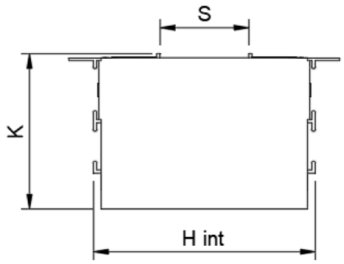

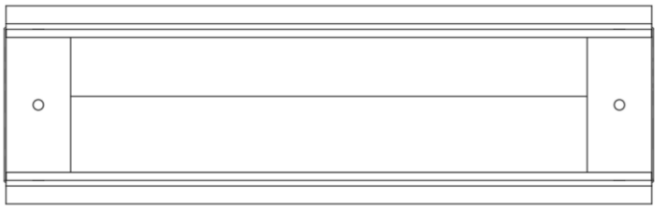

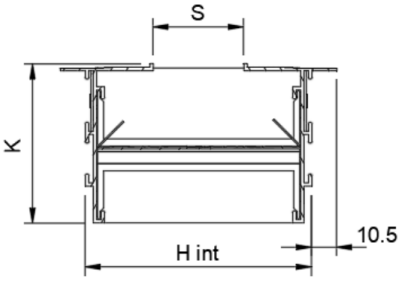

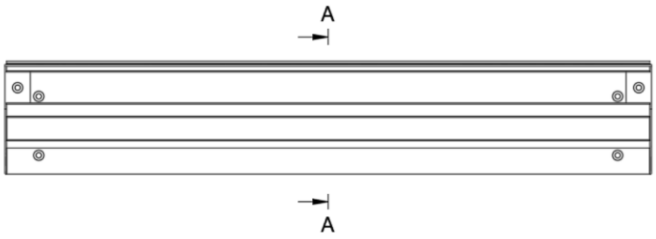

S [mm]	H int [mm]	H ext [mm]	W [mm]	K [mm]
25	82	103	253	67
38	95	116	266	67
51	108	129	279	67
64	121	142	292	67

LENOX - 90 ° angle

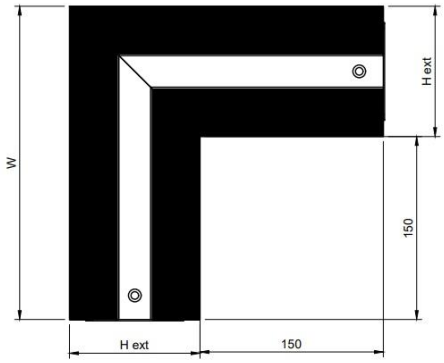

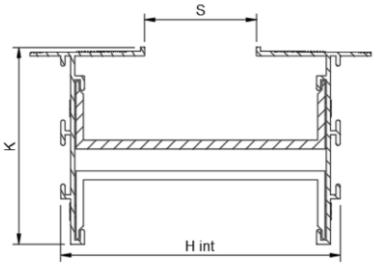

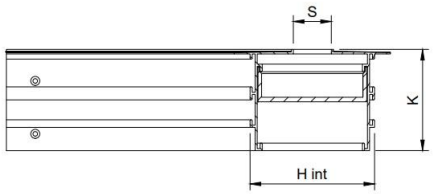

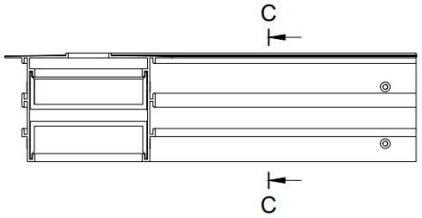

LENOX - 135 ° angle

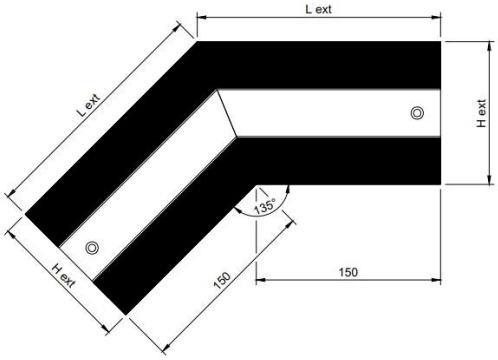

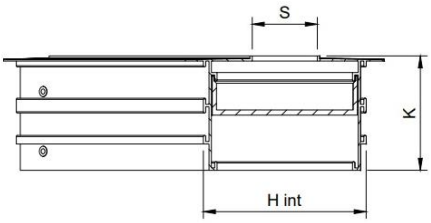

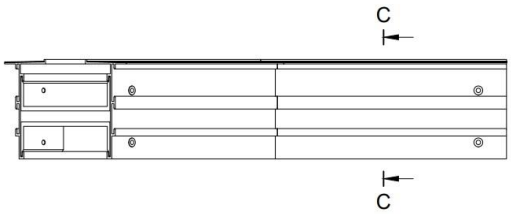

Product specifications

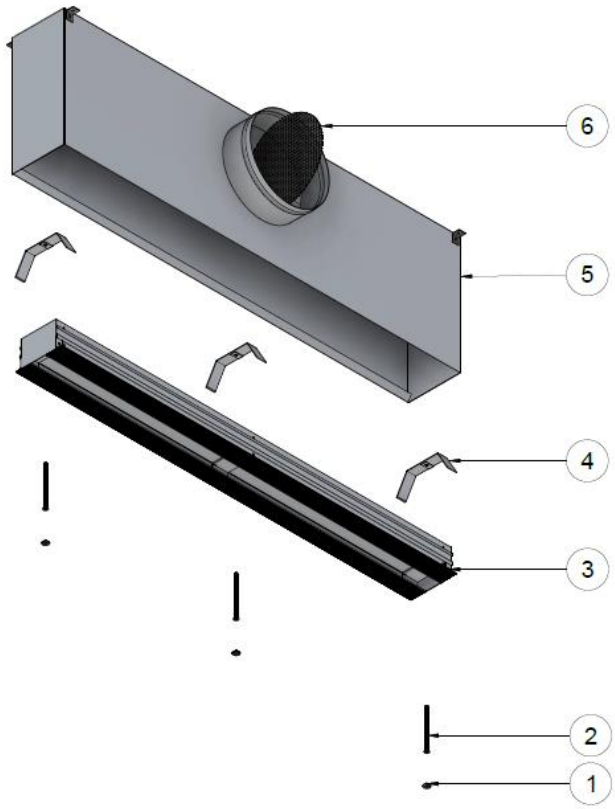

1 - Masking cap
2 - Fixing screw
3 - LENOX diffuser
4 - Bracket ("U" type system)
5 - Plenum box (optional)
6 - Perforated damper (optional)

Directing the air jet

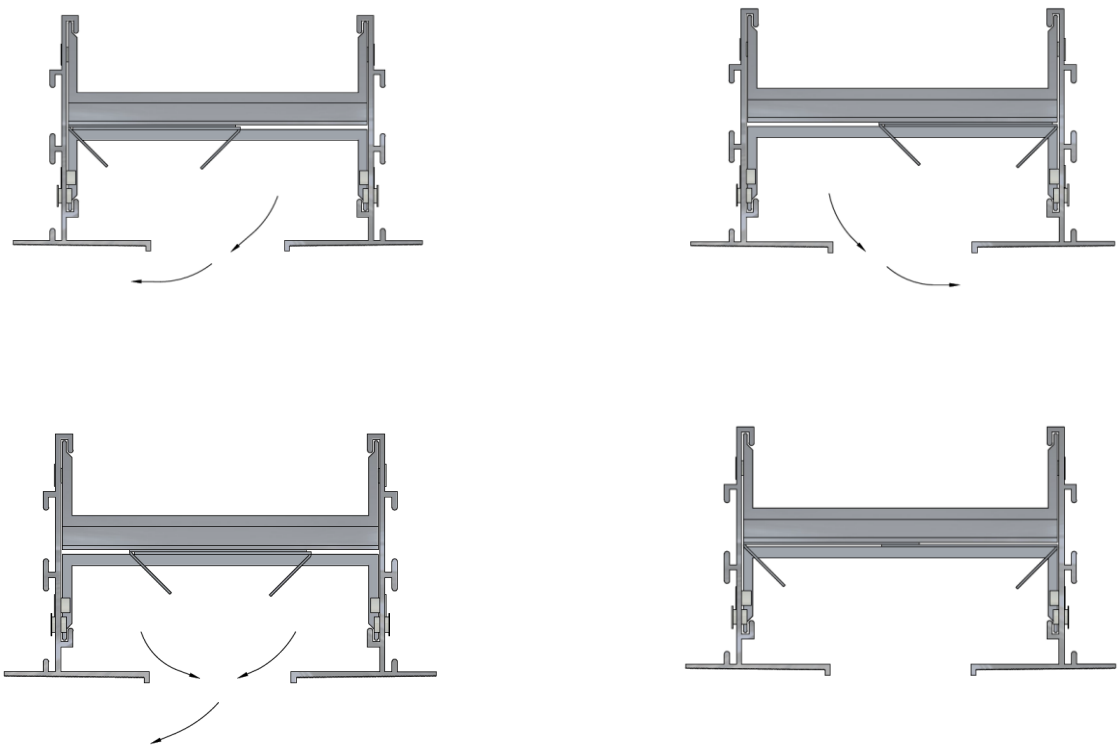

Section assembly

Long-length diffusers are made of modules with a maximum length of 3 m. In this case, the product is delivered with connecting elements between modules.

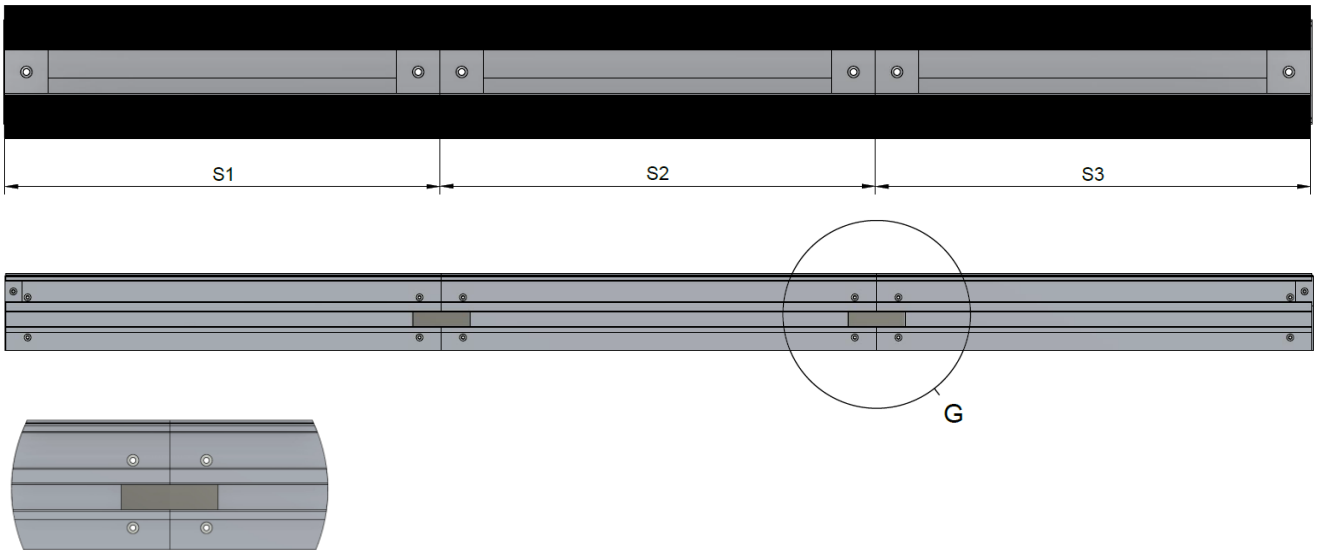

G – Mounting detail (connecting elements)

Accessories

The diffuser can be supplied with a plenum connecting to a circular duct with horizontal connection.

The plenum is provided with suspension elements (lugs) and bead roll on the spigot, for easy fixing of the flexible duct.

The plenum is delivered insulated or uninsulated.

Optionally, a perforated damper can be mounted on the plenum connection to balance the air flow.

Adapter (plenum box)

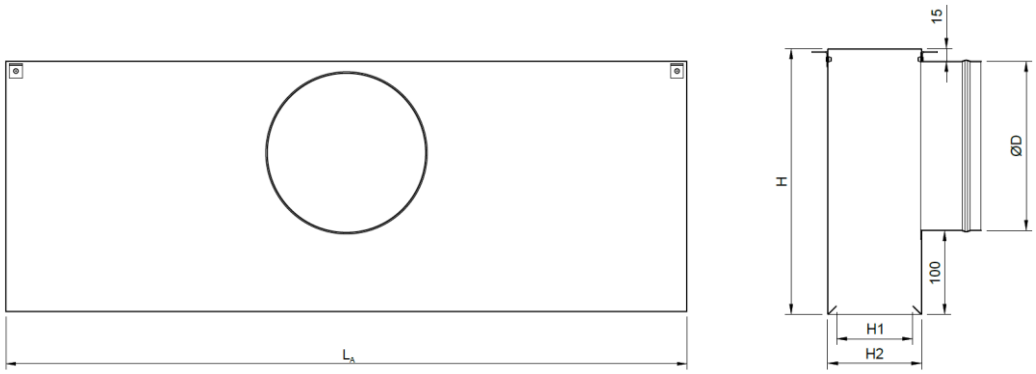

$L_A = L_{LENOX} + 4$
H1 = H int LENOX + 2
H2 = H1 + 16
H – depending on ØD

The adapter is made of Z140 galvanized steel sheet and is equipped with suspension lugs.

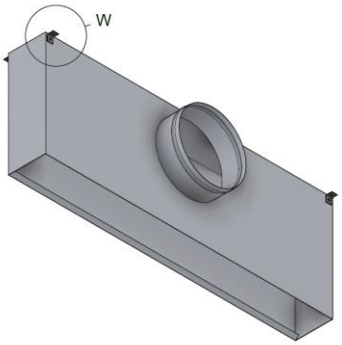

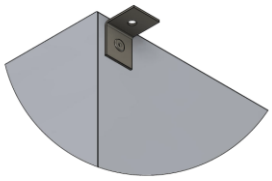

W - Suspension lug

On request, the plenum can be insulated with 6 mm thick elastomeric rubber.

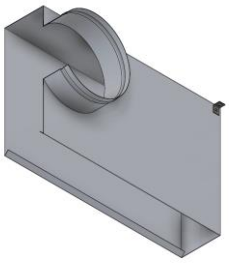

AN - Uninsulated adapter

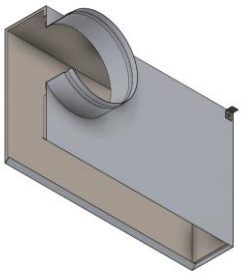

AIZ - Insulated adapter

Perforated damper

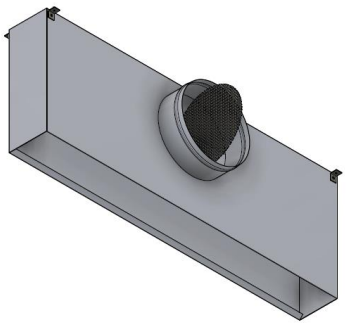

Position 0°

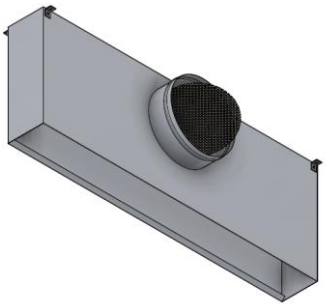

Position 45°

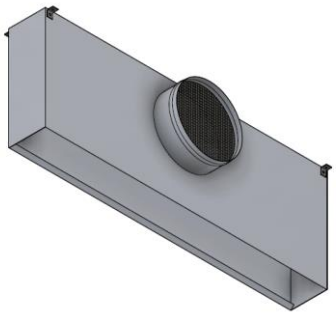

Position 90°

The perforated damper is mounted on the adapter spigot and has the role of balancing the air flow.

Functional parameters

L x H [mm]	Slot dimension [mm]	ØD [mm]	Functional parameters							
600 x 82	25	150	Air flow [m³/h]	**43**	**86**	**126**	**169**	**212**	**255**	**299**
			Pt [Pa]	2	8	19	33	51	74	99
			Ps [Pa]	2	7	16	29	45	64	87
			NR [dB(A)]	5	8	<15	20	29	36	40
			X [m]	0.6 1.5	1.8 2.7	2.7 3.7	3.0 4.0	3.0 4.3	3.4 4.9	3.7 5.5
1200 x 82			Air flow [m³/h]	**68**	**137**	**205**	**273**	**338**	**406**	**475**
			Pt [Pa]	2	8	16	29	45	65	87
			Ps [Pa]	1	5	10	19	29	42	56
			NR [dB(A)]	6	9	<15	17	25	32	38
			X [m]	0.6 1.5	1.8 3.7	2.7 4.6	3.7 5.2	3.7 5.5	4.6 6.1	4.9 6.7
1500 x 82			Air flow [m³/h]	**86**	**169**	**255**	**338**	**424**	**511**	**594**
			Pt [Pa]	2	9	20	35	54	78	105
			Ps [Pa]	1	5	10	19	29	42	56
			NR [dB(A)]	5	9	<15	18	26	22	38
			X [m]	0.6 2.1	2.1 4.0	3.0 5.2	4.0 5.8	4.6 6.1	4.9 6.7	5.2 7.3
600 x 82		200	Air flow [m³/h]	**86**	**126**	**169**	**212**	**255**	**299**	**338**
			Pt [Pa]	7	17	30	47	67	89	117
			Ps [Pa]	7	16	28	45	64	85	112
			NR [dB(A)]	6	<15	20	28	35	41	44
			X [m]	1.5 2.7	2.7 3.4	3.0 4.3	3.4 4.6	3.7 5.5	3.7 5.8	4.0 6.1
1200 x 82			Air flow [m³/h]	**118**	**187**	**255**	**324**	**392**	**457**	**525**
			Pt [Pa]	4	10	19	30	44	60	79
			Ps [Pa]	3	8	16	25	37	51	67
			NR [dB(A)]	4	8	<15	23	30	36	41
			X [m]	1.2 3.0	2.4 4.3	3.4 5.2	4.0 5.8	4.6 6.7	4.9 7.3	5.5 7.9
1500 x 82			Air flow [m³/h]	**137**	**219**	**306**	**392**	**475**	**561**	**644**
			Pt [Pa]	2	6	14	23	35	51	70
			Ps [Pa]	1	5	11	18	27	40	55
			NR [dB(A)]	7	10	<15	23	29	35	40
			X [m]	1.5 3.4	2.7 4.6	3.7 5.5	4.3 6.1	4.6 6.7	5.2 7.3	5.5 7.9
600 x 95	38	150	Air flow [m³/h]	**50**	**101**	**151**	**205**	**255**	**306**	**356**
			Pt [Pa]	2	9	22	37	61	91	117
			Ps [Pa]	0	8	19	31	52	78	99
			NR [dB(A)]	4	8	<15	22	31	39	44
			X [m]	1.2 2.1	2.1 3.4	2.7 4.0	3.0 4.6	4.0 5.2	4.3 5.8	4.6 6.1
1200 x 95			Air flow [m³/h]	**119**	**187**	**255**	**324**	**392**	**457**	**525**
			Pt [Pa]	5	11	22	37	51	71	93
			Ps [Pa]	3	6	13	22	30	42	55
			NR [dB(A)]	5	10	<15	20	24	30	36
			X [m]	1.5 3.4	2.4 4.6	3.7 5.2	4.0 5.8	4.6 6.1	4.9 6.4	5.2 7.0
1500 x 95			Air flow [m³/h]	**144**	**230**	**313**	**400**	**482**	**569**	**655**
			Pt [Pa]	3	14	25	41	61	85	109
			Ps [Pa]	0	6	11	19	29	40	50
			NR [dB(A)]	6	9	<15	20	26	31	37
			X [m]	1.5 3.4	2.7 4.6	4.0 5.5	4.6 6.4	5.2 7.0	5.5 7.6	6.1 8.2
600 x 95		200	Air flow [m³/h]	**50**	**101**	**151**	**205**	**255**	**306**	**356**
			Pt [Pa]	1	8	19	32	55	79	106
			Ps [Pa]	0	7	18	30	52	74	100
			NR [dB(A)]	3	7	<15	23	31	40	41
			X [m]	1.2 2.1	2.1 3.4	2.7 4.0	3.7 4.6	4.0 5.2	4.3 5.5	4.6 5.8
1200 x 95			Air flow [m³/h]	**119**	**205**	**288**	**374**	**457**	**544**	**630**
			Pt [Pa]	4	9	19	31	51	67	94
			Ps [Pa]	3	7	15	25	42	55	77
			NR [dB(A)]	6	9	<15	22	30	36	44
			X [m]	1.5 3.4	2.7 4.6	4.0 5.5	4.6 6.4	5.2 7.0	5.8 7.6	6.1 7.9
1500 x 95			Air flow [m³/h]	**144**	**245**	**350**	**450**	**550**	**655**	**756**
			Pt [Pa]	4	10	21	32	51	68	99
			Ps [Pa]	3	7	15	24	37	50	74
			NR [dB(A)]	8	10	<15	23	30	36	43
			X [m]	1.5 3.4	3.0 4.9	4.0 6.1	5.2 7.0	5.5 7.6	6.1 8.2	6.4 8.8

L x H [mm]	Slot dimension [mm]	ØD [mm]	Functional parameters							
600 x 108	51	200	Air flow [m³/h]	**68**	**137**	**205**	**273**	**338**	**406**	**475**
			Pt [Pa]	2	7	16	29	45	64	87
			Ps [Pa]	1	6	14	25	39	57	77
			NR [dB(A)]	6	9	<15	17	26	31	38
			X [m]	0.9 2.4	2.4 4.0	3.0 4.6	4.0 5.2	4.3 5.8	4.6 6.7	4.9 7.0
1200 x 108			Air flow [m³/h]	**169**	**255**	**338**	**425**	**511**	**594**	**680**
			Pt [Pa]	4	8	10	23	34	46	60
			Ps [Pa]	2	5	10	15	22	30	39
			NR [dB(A)]	7	10	14	15	22	30	37
			X [m]	1.2 3.4	z	3.7 5.2	4.0 5.8	4.3 7.0	7.6 8.2	5.2 8.5
1500 x 108			Air flow [m³/h]	**212**	**306**	**400**	**493**	**586**	**680**	**774**
			Pt [Pa]	4	9	16	24	34	46	59
			Ps [Pa]	2	5	9	13	19	25	33
			NR [dB(A)]	6	12	<15	22	29	34	39
			X [m]	1.8 3.7	3.7 5.2	4.0 5.8	4.3 7.0	4.9 7.9	5.5 8.5	6.4 9.1
600 x 108		300	Air flow [m³/h]	**86**	**169**	**255**	**338**	**425**	**511**	**594**
			Pt [Pa]	2	7	16	28	44	63	86
			Ps [Pa]	2	7	15	27	42	60	82
			NR [dB(A)]	7	10	<15	17	24	29	37
			X [m]	1.5 3.0	2.4 3.7	3.0 4.3	3.7 5.2	4.0 5.8	4.3 6.7	7.9 7.6
1200 x 108			Air flow [m³/h]	**169**	**288**	**406**	**525**	**644**	**763.2**	**882**
			Pt [Pa]	2	6	11	19	28	42	53
			Ps [Pa]	1	5	9	16	23	33	44
			NR [dB(A)]	6	9	<15	20	27	33	39
			X [m]	1.8 3.7	3.4 4.6	4.0 5.8	4.6 7.0	5.2 8.2	5.8 9.1	6.4 10.4
1500 x 108			Air flow [m³/h]	**212**	**349**	**482**	**619**	**756**	**892**	**1026**
			Pt [Pa]	2	6	11	18	27	38	50
			Ps [Pa]	2	4	8	14	21	29	38
			NR [dB(A)]	9	13	<15	23	31	36	41
			X [m]	2.1 4.6	3.4 5.8	4.3 7.3	4.9 7.6	5.8 9.1	6.4 9.8	7.6 10.4
600 x 121	64	250	Air flow [m³/h]	**169**	**245**	**324**	**400**	**475**	**550**	**630**
			Pt [Pa]	6	12	21	32	46	62	80
			Ps [Pa]	11	11	19	29	41	56	72
			NR [dB(A)]	9	13	<15	22	29	35	40
			X [m]	2.7 3.4	2.7 4.0	3.7 5.2	4.3 5.5	4.9 6.7	5.2 7.3	5.5 7.9
1200 x 121			Air flow [m³/h]	**237**	**374**	**511**	**644**	**781**	**918**	**1055**
			Pt [Pa]	4	9	17	28	40	56	73
			Ps [Pa]	2	6	12	19	28	38	51
			NR [dB(A)]	8	14	<15	25	33	40	45
			X [m]	2.4 5.2	4.3 6.7	4.9 7.6	5.2 8.5	5.8 9.4	6.7 10.1	7.3 10.7
1500 x 121			Air flow [m³/h]	**255**	**406**	**561**	**712**	**867**	**1018**	**1173**
			Pt [Pa]	3	8	16	26	37	52	69
			Ps [Pa]	0	5	9	15	22	30	40
			NR [dB(A)]	9	15	<15	23	31	38	43
			X [m]	2.4 4.9	3.7 6.4	4.6 7.6	5.5 8.8	6.4 9.8	7.0 10.7	8.2 11.6
600 x 121		300	Air flow [m³/h]	**169**	**245**	**324**	**400**	**475**	**550**	**630**
			Pt [Pa]	5	11	18	28	40	54	70
			Ps [Pa]	5	10	17	26	37	51	65
			NR [dB(A)]	7	12	<15	20	27	33	38
			X [m]	2.7 3.4	2.7 4.0	3.7 5.2	4.3 5.5	4.9 6.7	5.2 7.3	5.5 7.9
1200 x 121			Air flow [m³/h]	**237**	**381**	**525**	**670**	**817**	**961**	**1105**
			Pt [Pa]	3	8	15	24	35	49	65
			Ps [Pa]	2	6	11	19	28	38	51
			NR [dB(A)]	7	13	15	23	31	38	43
			X [m]	2.4 5.2	4.3 6.7	4.9 7.6	5.2 8.8	6.1 9.8	7.0 10.4	7.9 11.3
1500 x 121			Air flow [m³/h]	**255**	**425**	**594**	**763**	**936**	**1105**	**1274**
			Pt [Pa]	2	7	13	22	33	47	62
			Ps [Pa]	2	5	9	16	23	32	43
			NR [dB(A)]	11	<15	16	26	34	40	46
			X [m]	2.4 4.9	3.7 6.4	4.9 7.9	5.8 9.4	6.7 10.1	7.6 11.3	8.5 11.9

Note: The values provided are for the grille-plenum assembly.

The legend
ØD [mm] - Diameter plenum
X [m] - The length of the air jet at a speed of 0.5 and 0.25 m/s
NR [dB (A)] - Noise level considering room attenuation of 10 dB
Pt [Pa] - Total pressure loss
Ps [Pa] - Static pressure loss

Installation

The diffuser is mounted in a false continuous ceiling or on the wall.

The fixing of the plenum diffuser is done by means of “U” type mounting systems (bracket), positioned inside the plenum and the screws.

If the product does not have a functional role (inactive transition sections) or is installed on the wall, then a "T" profile can be used to fix the diffuser. This profile is requested separately.

After fixing, apply gypsum plaster (adhesive) over the diffuser frame and then apply wall paint.

Installation in continuous ceiling

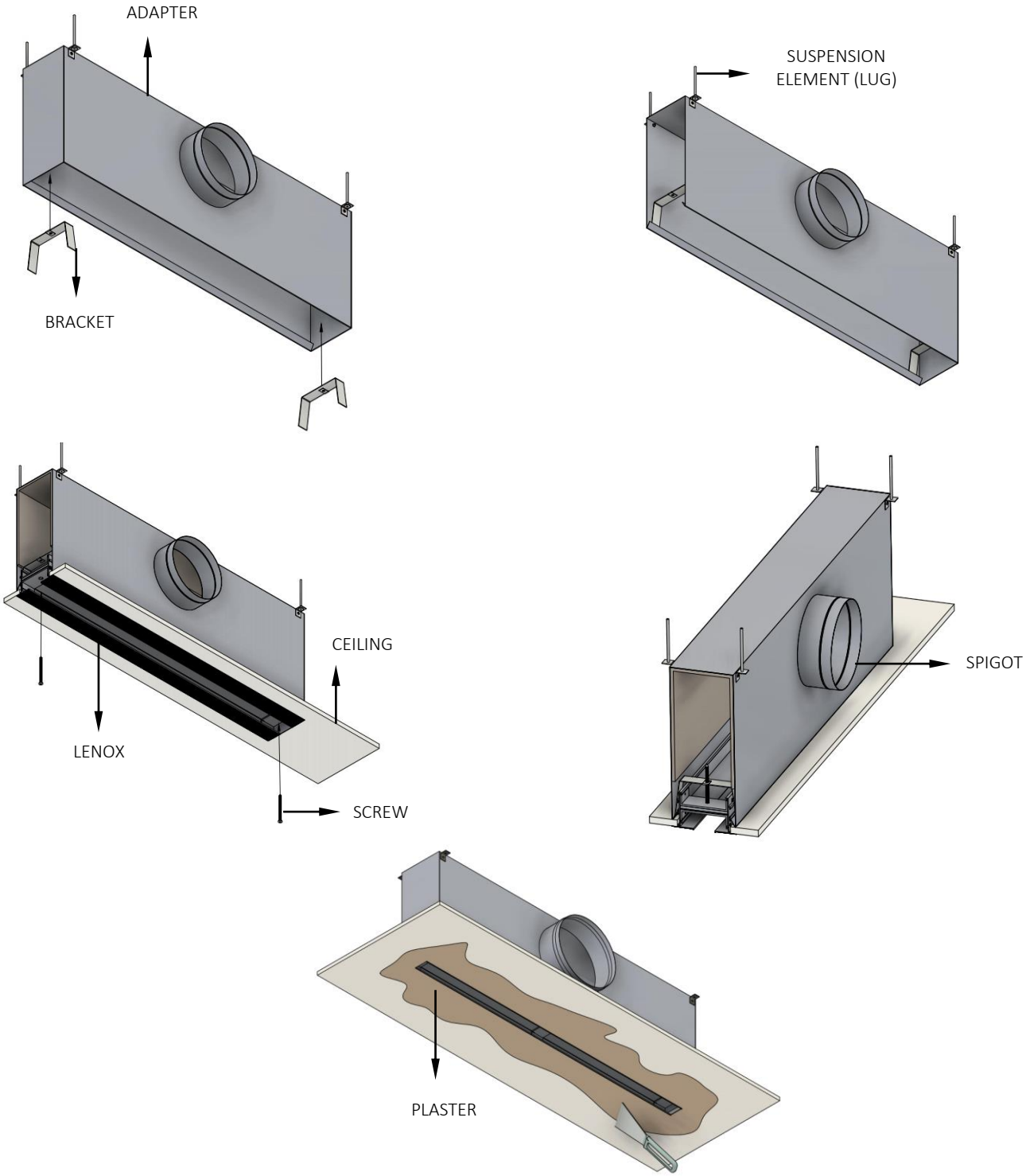

Wall mounting and transition sections (no functional role)

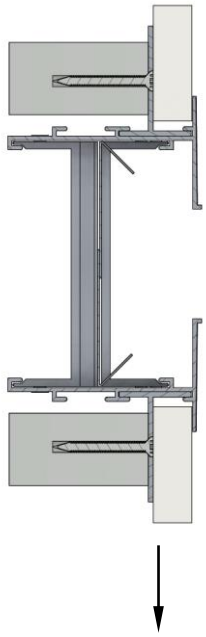

"T" PROFILE

The "T" profile is ordered together with the LENOX diffuser and is installed by the manufacturing department in the diffuser. The positioning of the "T" profile on the diffuser channel is done according to the thickness of the gypsum board (12.5 or 9.5 mm) . The gypsum board thickness is specified by the customer when ordering.

Fixing corner element (angle) in the ceiling

The corner elements, angle 90° and 135° are equipped by the production with "T" profile for gypsum thickness 12.5 mm. On request, they can be delivered with a "T" profile for gypsum thickness 9.5 mm.

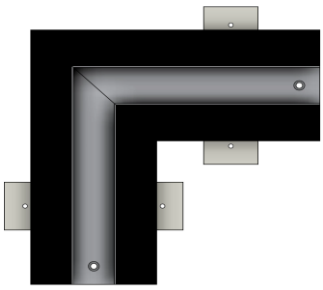

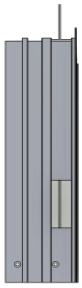

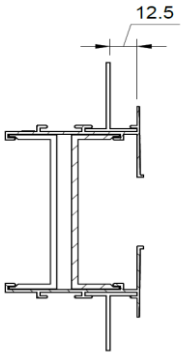

Order code

Example on how to place an order

Type	Length	Slot	Section	Accessories	Installation	Finish

LENOX

On request

25, 38, 51, 64 mm

S1 – Left end section
S2 – Middle section
S3 – Right end section

AIZ - Insulated adapter
AN - Uninsulated adapter
Perforated damper (plenum box)

Bracket (standard)
"T" profile (optional)

Frame anodized black and blades RAL 9005
RAL.. - Other RAL colors on request